# 50W Dimmable Driver

DIMD-5024

COM

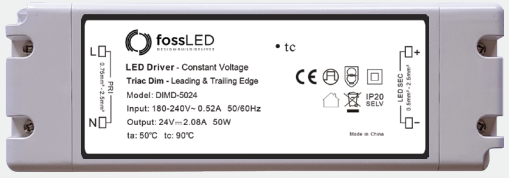


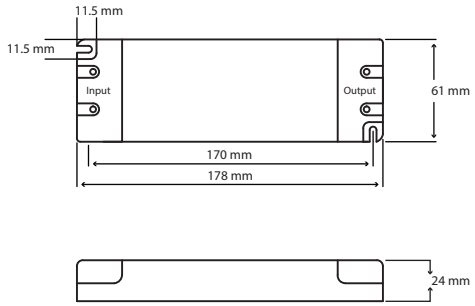


IP20 | DC 24V | Dimmable | 3 Year

Product Reference: **DIMD-5024**

FOSS Mains Dimmable Drivers are compatible with the majority of Leading & Trailing edge dimmers and automated lighting systems with a dimming capacity of 5 - 100%; for further information please contact us on 0203 198 1908.

Technical Specification:

| | | |
|---|---|---|
| Output | Ouput Power | 50w |
| | DC Voltage | 24v |
| | Dimming Capacity | 5 - 100% |
| | Voltage Tolerance | ±0.5V |
| | Rated Current | 2.08A |
| Input | Input Voltage Range | 180 - 240VAC |
| | AC Frequency | 47 - 63 Hz |
| | Power Factor | >0.65 |
| | Efficiency | >85% |
| | AC Current | 0.41A |
| | Inrush Current | 30A (Twidth=390μs) |
| | Leakage Current | <0.70mA/220VAC |
| Environment | Working Temp | -40°C - +60°C |
| | Relative Humidity | 20 - 90% |
| | Vibration | 10 - 500Hz/ 2g, 10 minutes |
| Saftey & EMC | Isolation Voltage | In/ Out 3750VAC |
| | EMI | EN55015 Class B |
| | Safety | EN61347-1, EN61347-2-13 |
| | EMC Emission | EN55015, EN61000-3-2,3 (≥50% Loading) |
| | EMC Immunity | EN6100-4-2,3,4,5,6,11 (Surge 4KV) |
| Size | Dimensions (mm) | 178 x 61 x 24 mm |