75W Dimmable Driver

DIMD-7524

COM

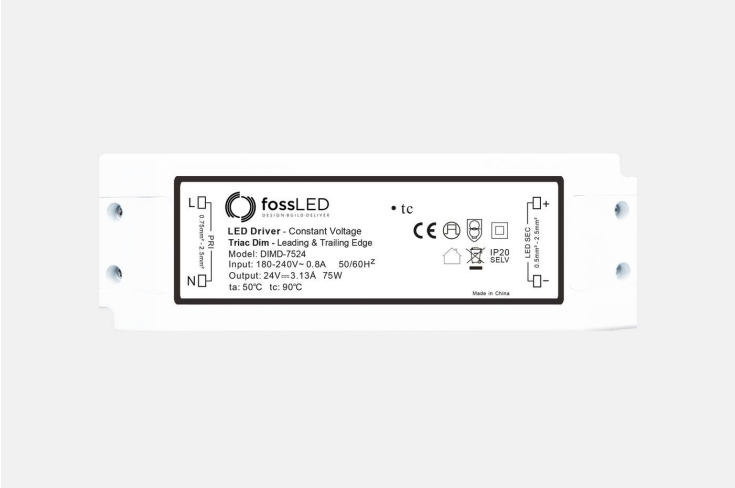

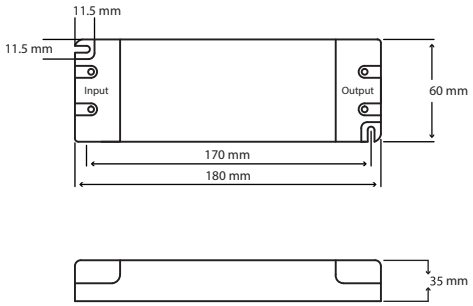

IP20 | DC 24V | Dimmable | 3 Year

Product Reference: **DIMD-7524**

FOSS Mains Dimmable Drivers are compatible with the majority of Leading & Trailing edge dimmers and automated lighting systems with a dimming capacity of 5 - 100%; for further information please contact us on 0203 198 1908.

Technical Specification:

Output	Ouput Power	75w
	DC Voltage	24v
	Dimming Capacity	5 - 100%
	Voltage Tolerance	±0.5V
	Rated Current	3.1A
Input	Input Voltage Range	180 - 240VAC
	AC Frequency	47 - 63 Hz
	Power Factor	>0.65
	Efficiency	>85%
	AC Current	0.74A
	Inrush Current	60A (Twidth=320μs)
	Leakage Current	<0.70mA/220VAC
Environment	Working Temp	-40°C - +70°C
	Relative Humidity	20 - 90%
	Vibration	10 - 500Hz/ 2g, 10 minutes
Saftey & EMC	Isolation Voltage	In/ Out 3750VAC
	EMI	EN55015 Class B
	Safety	EN61347-1, EN61347-2-13
	EMC Emission	EN55015, EN61000-3-2,3 (≥50% Loading)
	EMC Immunity	EN6100-4-2,3,4,5,6,11 (Surge 4KV)
Size	Dimensions (mm)	180 x 60 x 35mm